Resistor Transistor Logic (RTL)

❑ Transistor as a switch

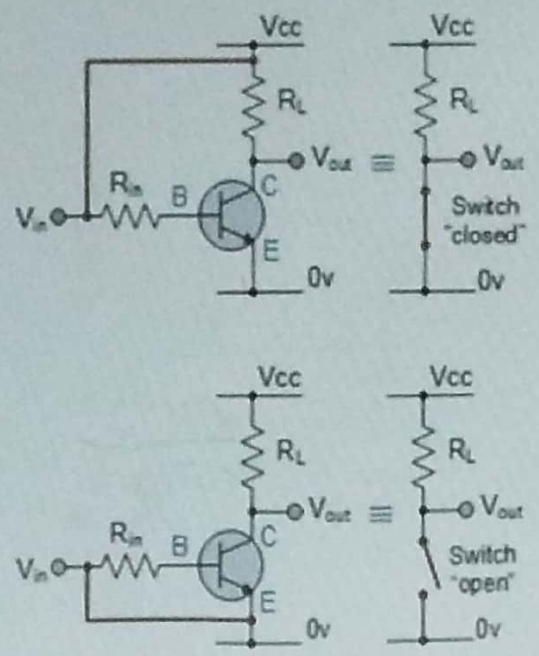

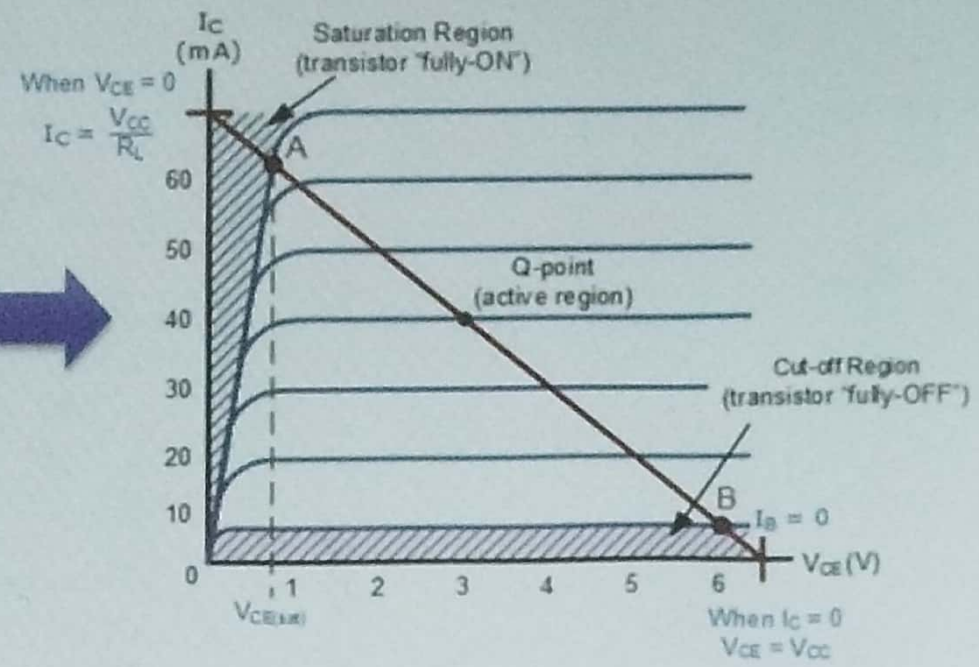

❑ RTL Logic

- This logic family, known as RTL (Resistor-Transistor Logic), combines resistors and transistors within its integrated circuit.
- Here, the transistor is operated in both saturation and cutoff regions and hence the speed of this logic family tends to be relatively low.

RTL NOT Gate

- A bipolar transistor switch is the simplest RTL gate (inverter or NOT gate) implementing logical negation.
- It consists of a common-emitter stage with a base resistor connected between the base and the input voltage source.
- This configuration allows the bipolar transistor switch to invert the input logic signal, providing a basic building block for digital logic circuits.

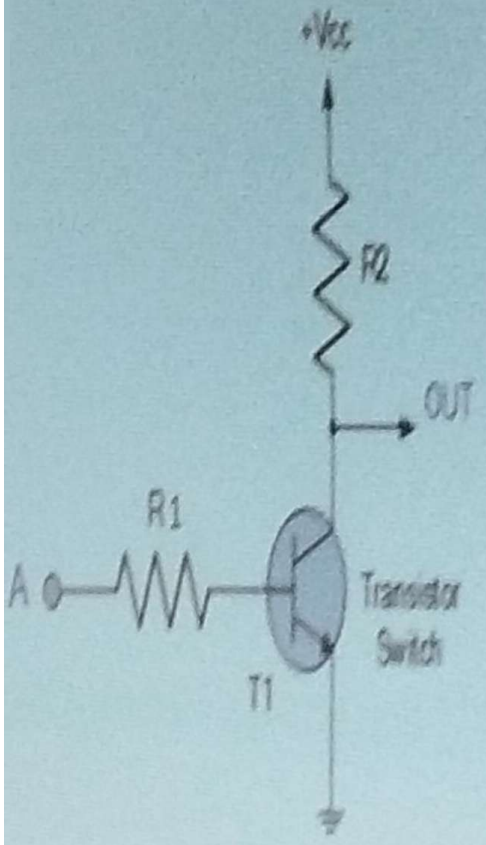

01 RTL NOT Gate

- A bipolar transistor switch is the simplest RTL gate (inverter or NOT gate) implementing logical negation.
- It consists of a common-emitter stage with a base resistor connected between the base and the input voltage source.
- This configuration allows the bipolar transistor switch to invert the input logic signal, providing a basic building block for digital logic circuits.

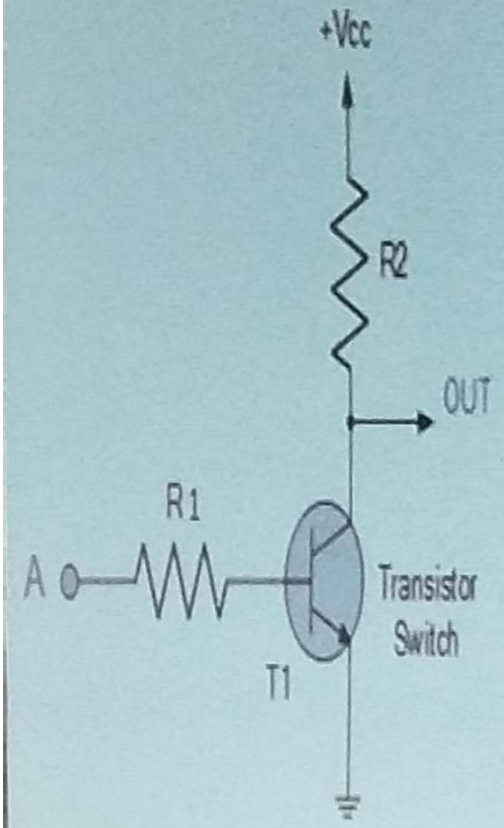

Symbol	Truth Table		
	A	Q	Operating Region of T_1
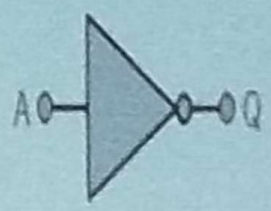 Inverter or NOT Gate	0	1	Cutoff
	1	0	Saturated

RTL NOR Gate

- The NOR logic gates can be constructed using Resistor-Transistor Logic (RTL)
- In general, RTL Logic is associated with poor noise margin, fan-out, lower speed and high power dissipation.
- Due to these drawbacks, RTL NOR Logic gates find limited application in modern electronic circuits

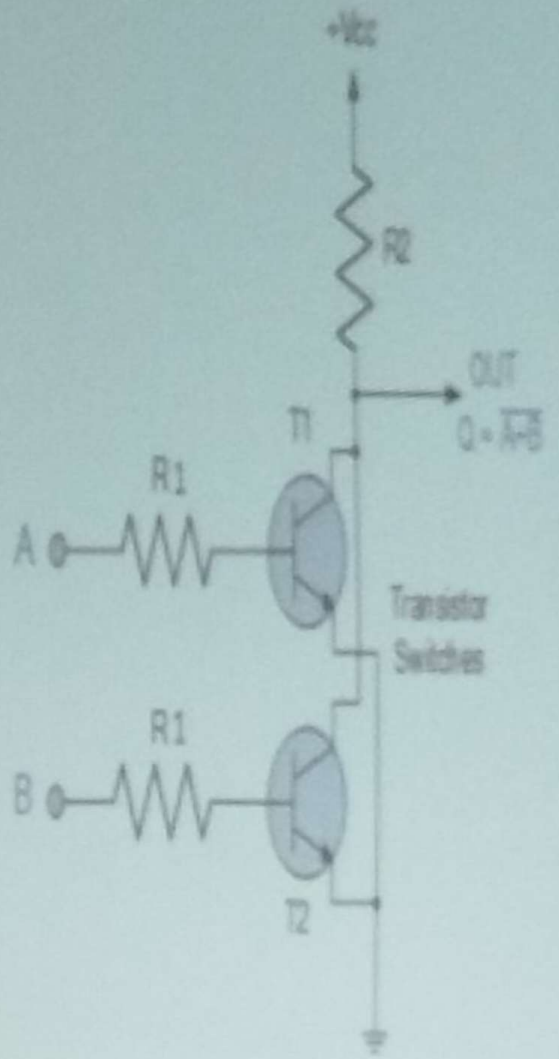

Symbol	Truth Table		
	A	B	Q
	0	0	1
	0	1	0
	1	0	0
	1	1	0

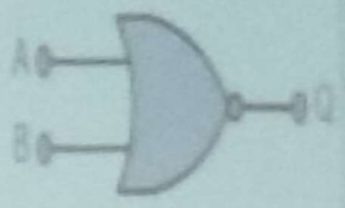

2-input NOR Gate

Exercise

Determine the output voltage (V_o), collector (I_C) and base (I_B) currents of each transistors including the I_R when both inputs are low (0, 0) and both inputs are high (1, 1). Confirm the operating region of Q1 for the second case using your results. Assume that V_{BE} (sat) = 0.7 V, V_{CE} = 0.2 V and β = 50.

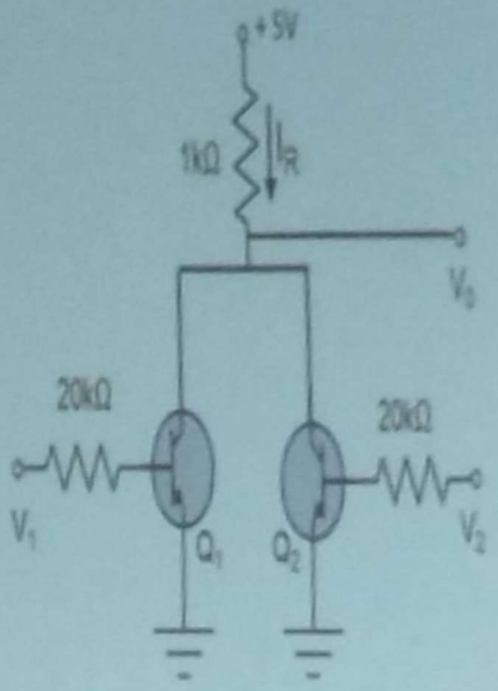

Solution:

When both inputs are low → $V_o = 5$ V

$I_{B1} = I_{B2} = I_{C1} = I_{C2} = 0$ mA $\quad I_R = 0$ mA

When both inputs are high → $V_o = 0.2$ V

$I_R = 4.8$ mA $\quad I_{C1} = I_{C2} = 2.4$ mA

$I_{B1} = I_{B2} = 0.215$ mA

Mode	BE junction	BC junction	Currents
Active	Forward	Reverse	$I_C = \beta I_B$
Cutoff	Reverse	Reverse	$I_C = I_B = I_E = 0$
Saturation	Forward	Forward	$I_C < \beta I_B$
Reverse active	Reverse	Forward	$I_C = \beta I_B$

01 Diode-Transistor Logic (DTL)

- Diode-Transistor Logic (DTL) is a digital circuit design that uses diodes for input and employs transistor switches for signal amplification.
- This logic family is known for its improved noise margin and fan-out compared to RTL (Resistor-Transistor Logic). However, DTL circuits still exhibit relatively slower speeds
- Despite these drawbacks, DTL has found applications in electronic designs where its specific advantages outweigh its limitations

❑ DTL NAND Gate

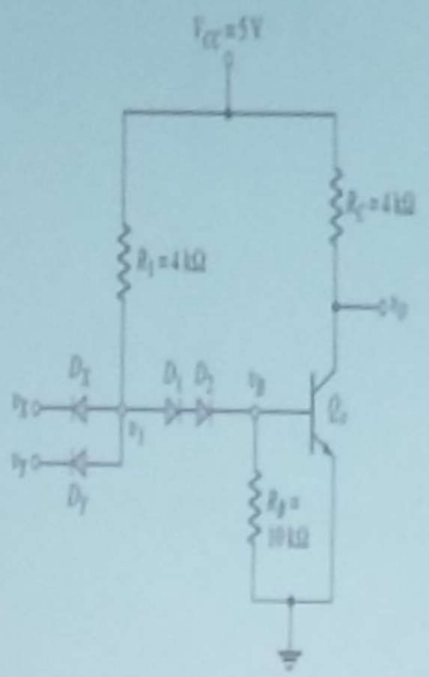

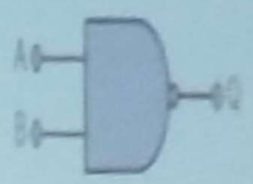

2-input NAND Gate

V_A	V_B	V_O
0	0	1
0	1	1
1	0	1
1	1	0

DTL Operation

Assume; low input → 0.2 V and high input → 5.0 V

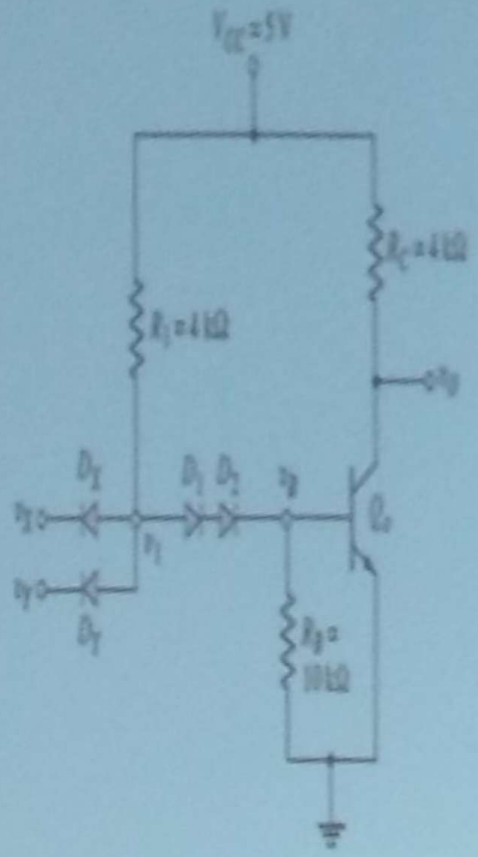

Input		State					Output
V_X	V_Y	D_X	D_Y	D_1	D_2	Q_0	V_0
0	0	ON	ON	OFF	OFF	OFF	1
0	1	ON	OFF	OFF	OFF	OFF	1
1	0	OFF	ON	OFF	OFF	OFF	1
1	1	OFF	OFF	ON	ON	ON	0

- If all inputs are high (5.0V), then the transistor Q_0 is saturated and if any inputs goes low (0.2V), then the transistor Q_0 is cuts off
- These conditions confirm the dynamic operation of a NAND gate using diode transistor logics
- The number of inputs can be increased by adding more input diodes